NEMO

PROJECTEUR 365 FLOOR

Le Corbusier

The Projecteur of Le Corbusier was designed for the Chandigarh High Court, India, in 1954. Aluminium body painted in night blue, white sand or moka. Diffuser glass curved and sandblasted in the inner part. Painted body, base and canopies. Screws and small metal parts black chromed. Available in the floor, wall/ceiling and pendant versions. The wall/ceiling and pendant lamps are available also in the outdoor version (IP54).

NEMO

PROJECTEUR 365 FLOOR

Le Corbusier

E27 FLUO/LED/HALO

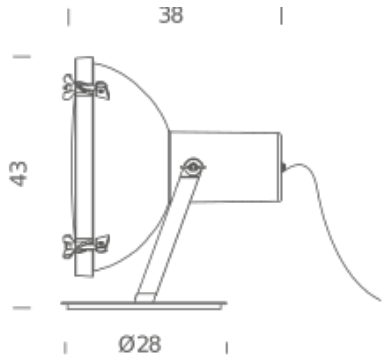

Lamping

Source	E27 bulb
Total power	150W
Emission	direct, spot
Switching	dimmable, according to bulb
Tension	230V
Ip class	30
Materials	aluminium
Notes	orientable, switch on cable, cable lenght 2,9m

Codes

	Structure	Diffuseur
PRJ EDW 2A sanded	**night blue**	
PRJ EWS 2A sanded	**white sand**	
PRJ EMS 2A sanded	**moka**	

Package 1

Dimensions	50x50x50
Gross weight	7 Kg